28X/IST103/ (1/2)

REV. 0 - 19/02/2021

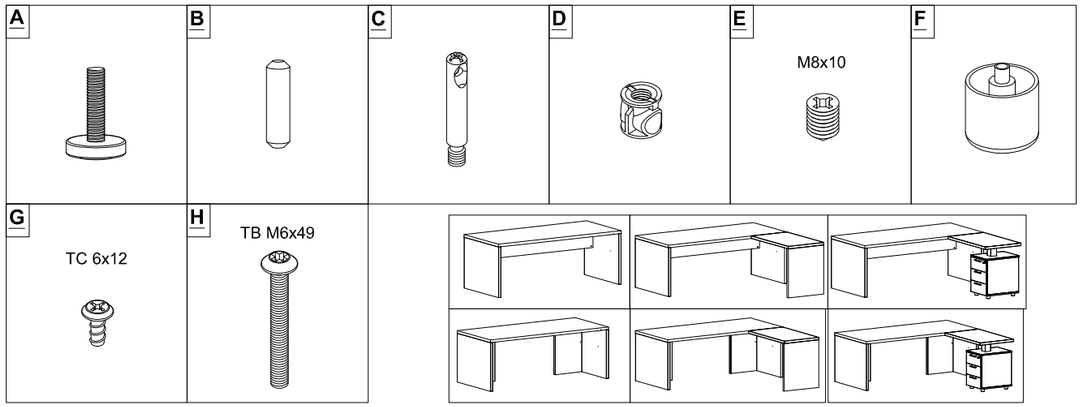

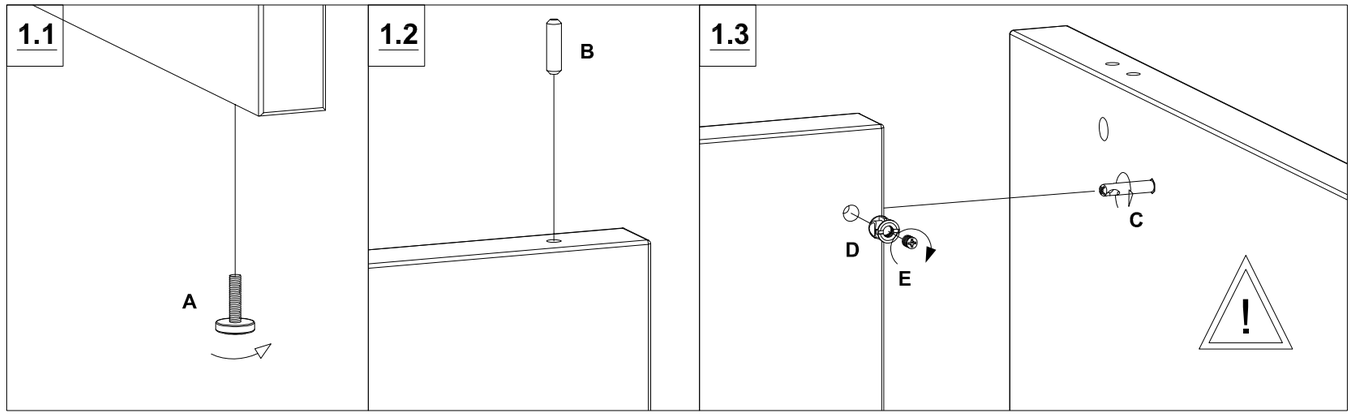

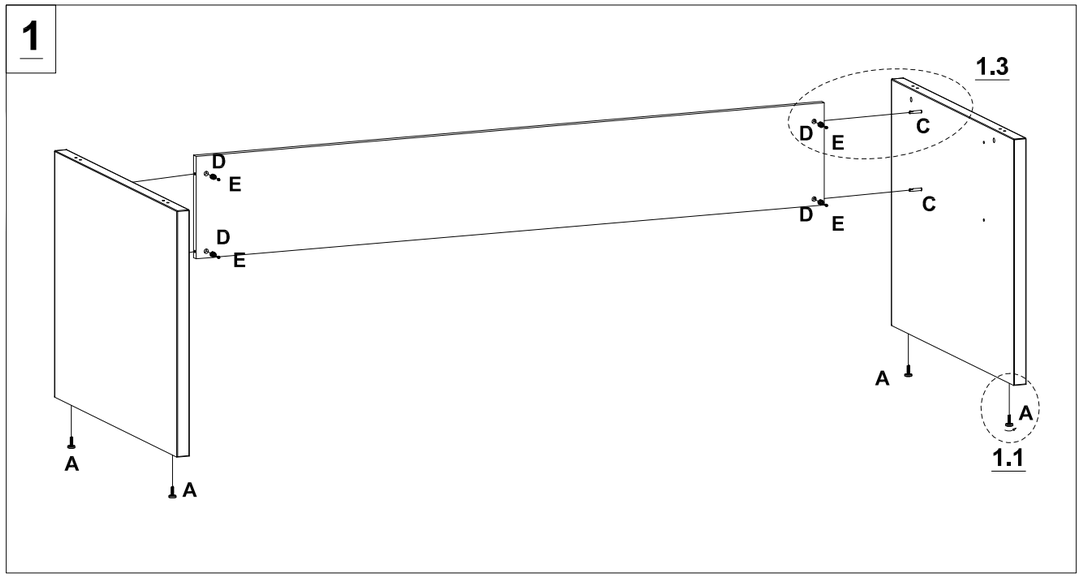

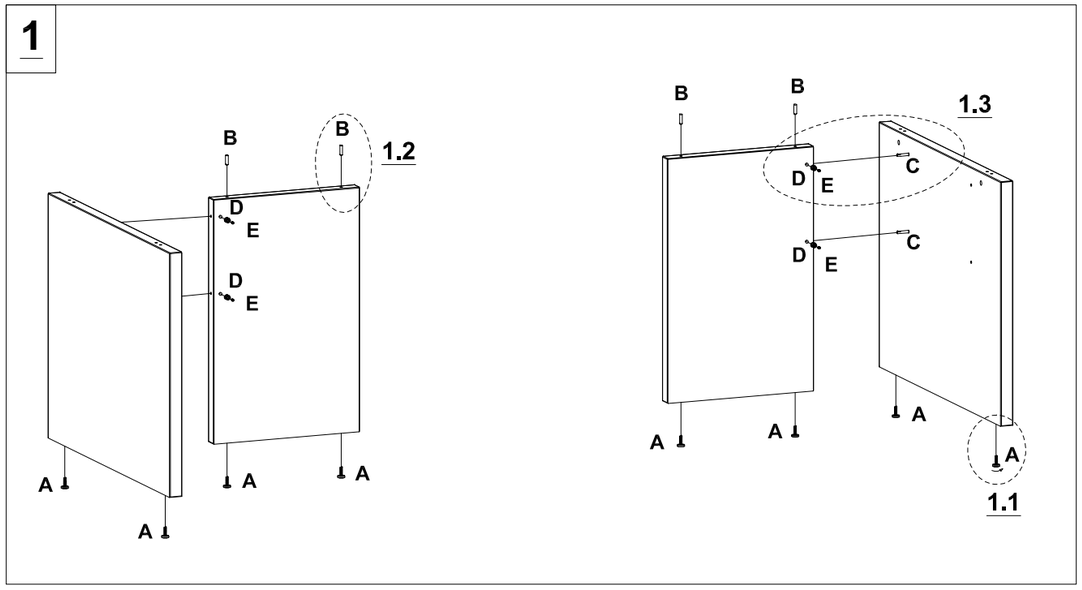

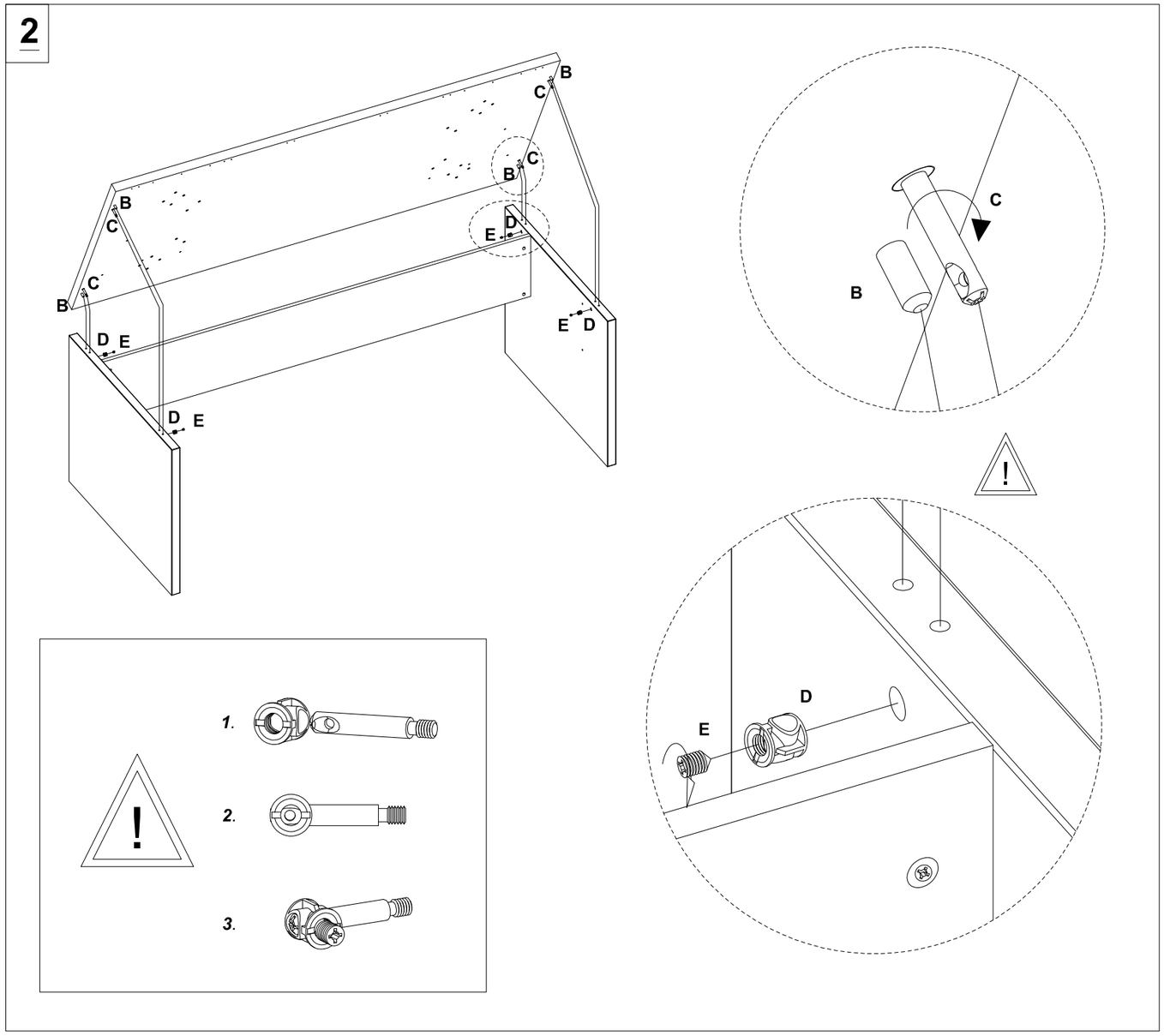
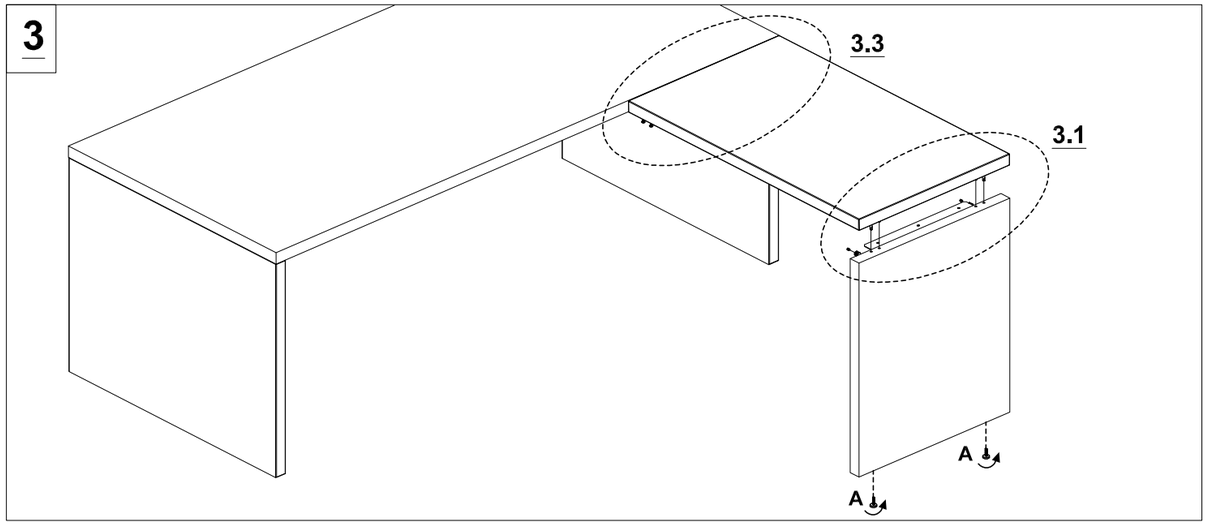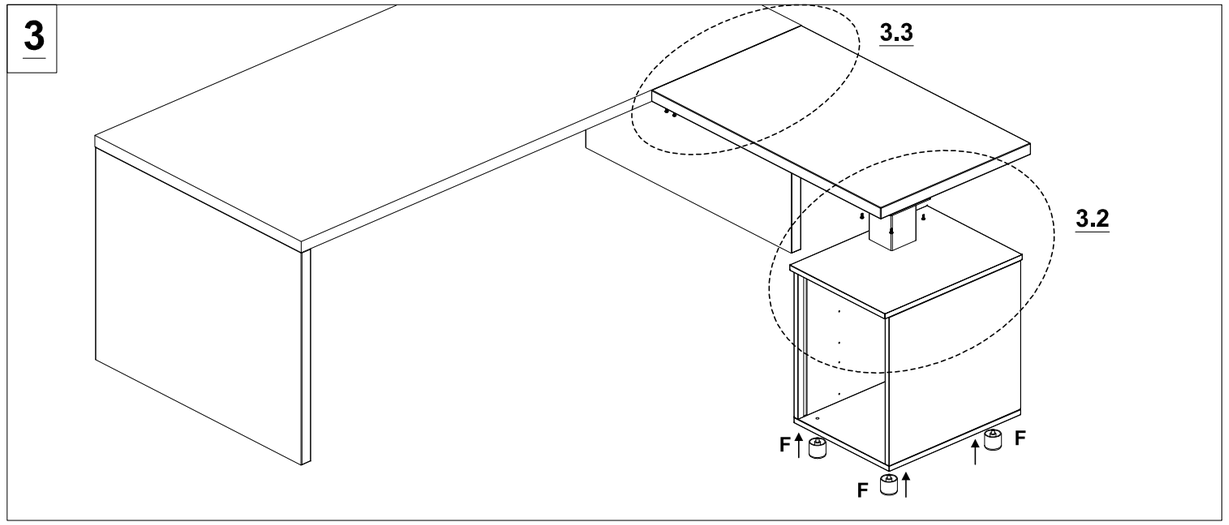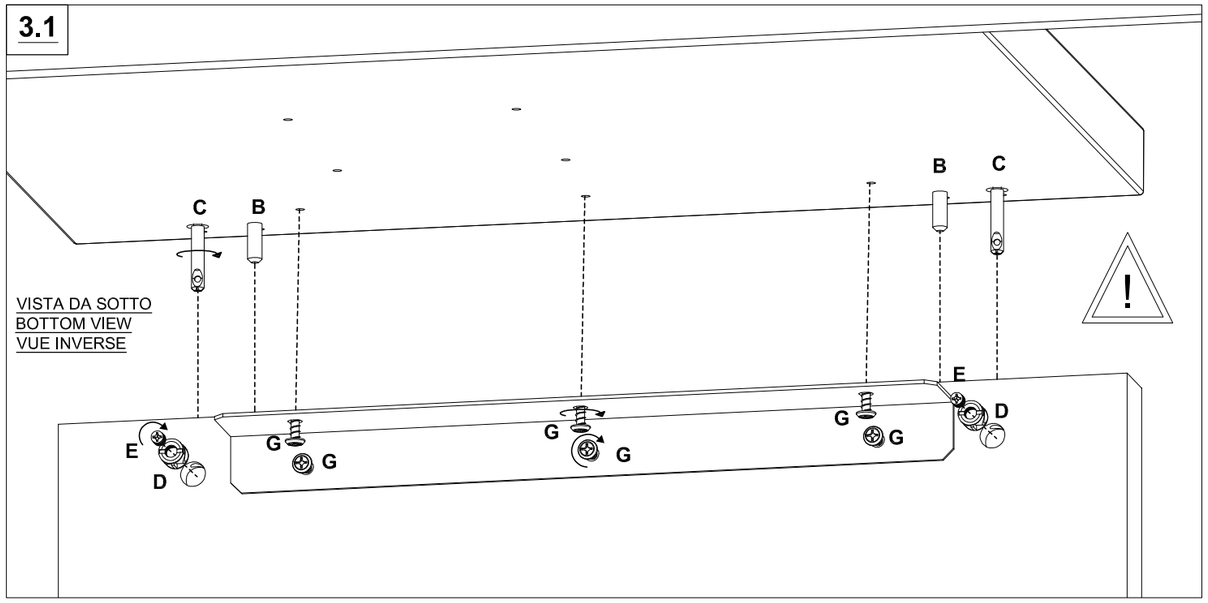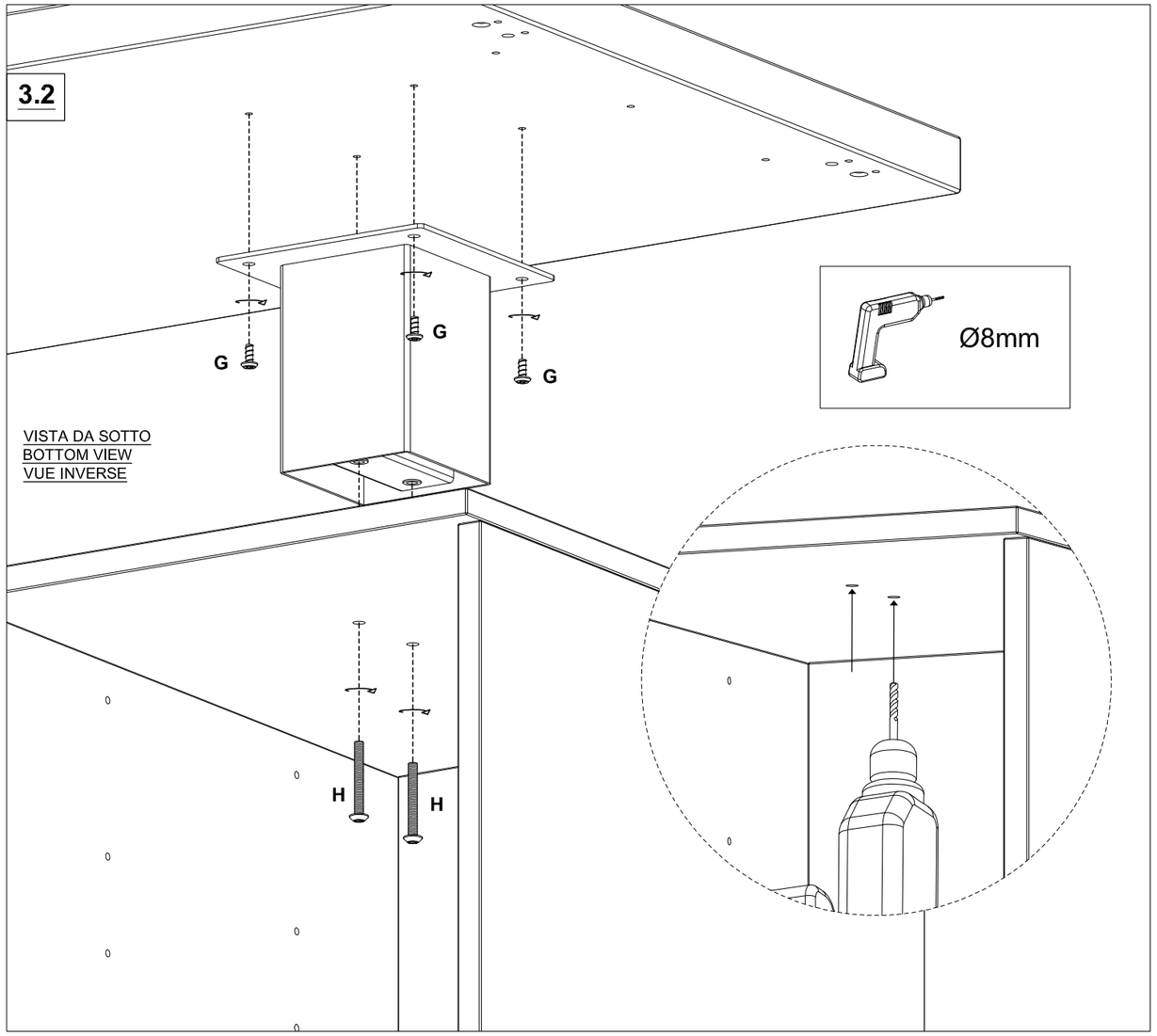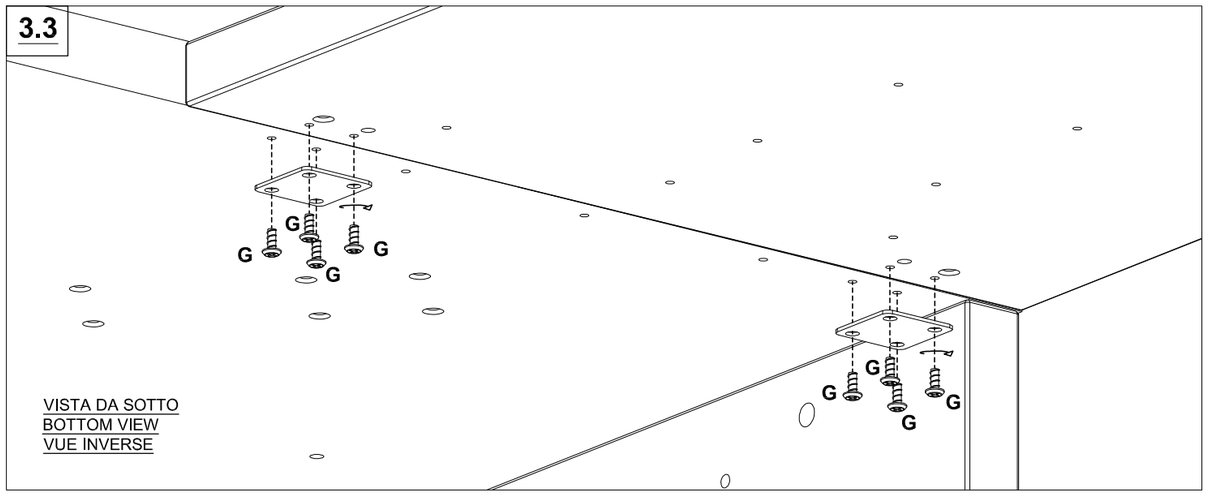
28X/IST103/ (2/2)